Table 4–33 Recommended cables

Cable Size	Cable Size (mm^2)	Ω/km	Allowable Length (m)	OD (mm)
3P×26AWG	0.13	143	10.0	6.0±0.2
3P×25AWG	0.16	89.4	16.0	6.2±0.2
3P×24AWG	0.2	79.6	18.0	6.5±0.2
3P×23AWG	0.26	68.5	20.9	6.8±0.2
3P×22AWG	0.32	54.3	26.4	7.0±0.2
3P×21AWG	0.41	42.7	33.5	7.3±0.2
3P×20AWG	0.52	33.9	42.2	7.6±0.3
3P×19AWG	0.57	26.9	53.2	8.5±0.3
3P×18AWG	0.81	21.4	66.8	8.8±0.3
3P×17AWG	1.03	16.3	87.7	9.7±0.3
3P×16AWG	1.31	13.5	105.0	11.4±0.3

Note

If the cables of above 16AWG are required, contact the sales personnel of Inovance.

4.5 Communication Terminals CN3 and CN4

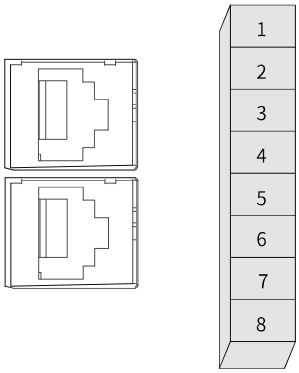

Figure 4-39 Pins of Terminals CN3 and CN4

Table 4–34 Pin assignment

Pin No.	Description	Description
1	CANH	CAN communication port
2	CANL	
3	CGND	CAN communication ground
4	RS485+	RS485 communication port
5	RS485-	

Pin No.	Description	Description
6	RS232-TXD	RS232 transmitting end, connected to the receiving end of the host controller
7	RS232-RXD	RS232 receiving end, connected to the transmitting end of the host controller
8	GND	Ground
Enclosure	PE	Shield

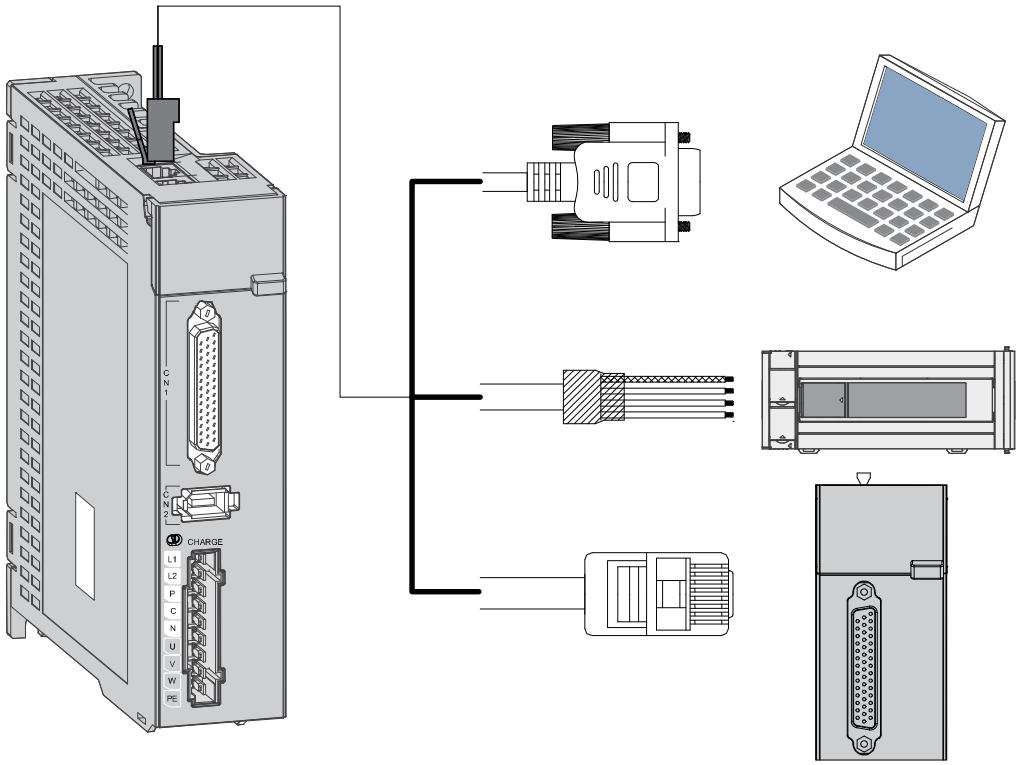

Figure 4-40 Wiring of communication cables

CN3 and CN4 are identical communication terminals connected in parallel internally.

CN3 and CN4 terminals in the drive are used for communication with the PC, PLC, and other drives. For pin assignment of CN3/CN4, see *"Table 4–34 Pin assignment" on page 95*.

CAN communication connection

- **CAN communication with PLC**
  The following figure shows the cable used for CAN communication between the servo drive and PLC.

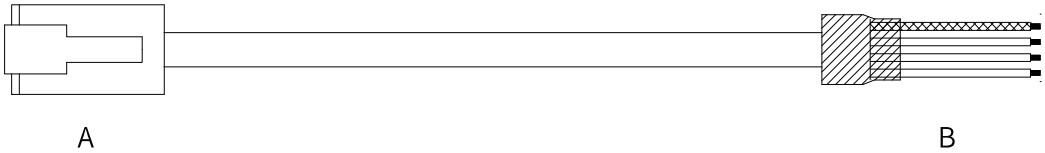

Figure 4-41 Outline drawing of cable used for CAN communication between the servo drive and PLC

Use a three-conductor shielded cable to connect the CAN bus, with the three conductors connected to CANH, CANL, and CGND (CGND represents isolated RS485 circuit) respectively. Connect CANH and CANL with twisted pairs. Connect CGND to the CAN reference ground. Connect the shield to the device ground. Connect a 120 Ω termination resistor on each end of the bus to prevent CAN signal reflection.

Table 4–35 Pin connection relation of the cable used for CAN communication between the servo drive and PLC

RJ45 on the Drive Side (A)			PLC Side (B)		
Communication Type	Pin No.	Description	Communication Type	Pin No.	Description
CAN	1	CANH	CAN	1	CANH
	2	CANL		2	CANL
	3	CGND		3	CGND
-	Enclosure	PE (shield layer)	-	Enclosure	PE (shield layer)

- **CAN communication among multiple servo drives connected in parallel**
  The following figure shows the cable used for CAN communication among multiple servo drives connected in parallel.

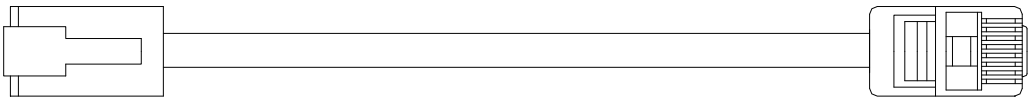

Figure 4-42 Outline drawing of multi-drive communication cable

Table 4–36 Pin connection relation of multi-drive communication cable (pins in CAN group used only)

RJ45 on the Drive (A)			RJ45 on the Drive Side (B)		
Communication Type	Pin No.	Description	Communication Type	Pin No.	Description
CAN	1	CANH	CAN	1	CANH
	2	CANL		2	CANL
	3	CGND		3	CGND
-	Enclosure	PE (shield layer)	-	Enclosure	PE (shield layer)

Use the daisy chain mode for CAN bus, as shown in the following figure.

- Shielded twisted pair cables are recommended for connecting the CAN bus. Twisted pairs are recommended for connecting CANH and CANL.
- Connect a 120 Ω termination resistor on each end of the bus to prevent signal reflection.
- Connect the reference grounds of CAN signals of all the nodes together.
- Up to 64 nodes can be connected.

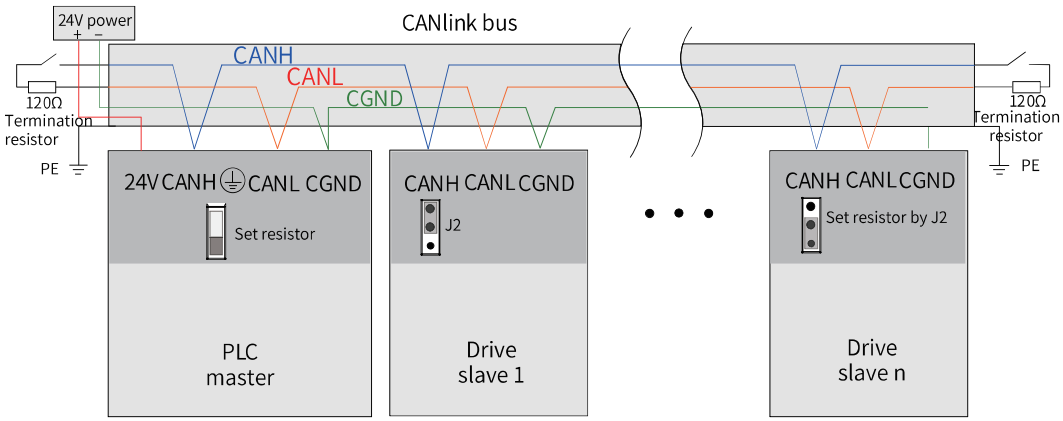

Figure 4-43 CAN bus topology

Caution

Do not connect the CGND terminal of the host controller to the GND terminal of the servo drive. Failure to comply will damage the machine.

The transmission distance of CAN bus is directly dependent on the baud rate and communication cable. The following table shows the relationship between the maximum transmission distance of CAN bus and the baud rate.

No.	Speed (bps)	Transmission Distance (m)	Number of Nodes	Cross-sectional Area (mm^2)
1	1M	25	64	0.205
2	500 k	95	64	0.34
3	100k	560	64	0.5
4	50k	1100	64	0.75

RS485 Communication Connection

- **RS485 communication with PLC**

  The following figure shows the cable used for 485 communication between the servo drive and PLC.

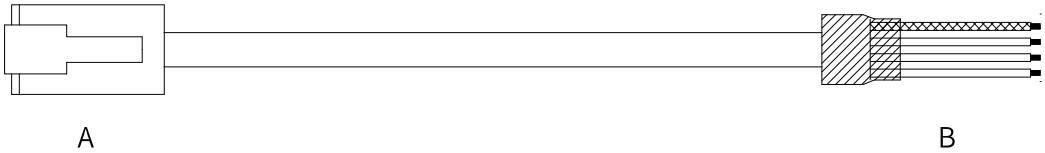

Figure 4-44 Outline drawing of cable used for CAN communication between the servo drive and PLC

Use a three-conductor shielded cable to connect the RS485 bus, with the three conductors connected to 485+, 485-, and GND (GND represents non-isolated RS485 circuit) respectively. Connect RS485+ and RS485- with two conductors twisted together and connect the remaining conductor to the RS485 reference ground (GND). Connect the shield to the device ground (PE). Connect a 120 Ω termination resistor on each end of the bus to prevent RS485 signal reflection.

Table 4–37 Pin connection relation of the cable used for CAN communication between the servo drive and PLC

RJ45 on the Drive (A)			PLC Side (B)		
Communication Type	Pin No.	Description	Communication Type	Pin No.	Description
RS485	4	485+	RS485	4	485+
	5	485-		5	485-
	8	GND		8	GND
-	Enclosure	PE (shield layer)	-	Enclosure	PE (shield layer)

- **Wiring of multi-drive RS485 communication**

  The following figure shows the cable used for multi-drive RS485 communication.

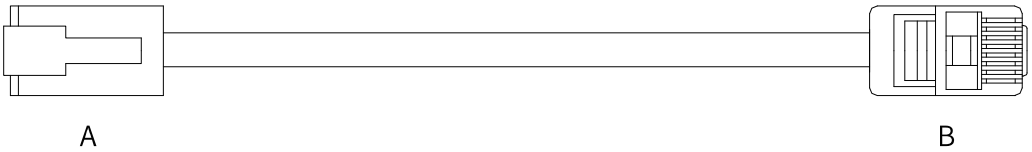

Figure 4-45 Outline drawing of multi-drive communication cable

Table 4–38 Pin connection relation of the cable used for multi-drive RS485 communication (pins in 485 group used only)

RJ45 on the Drive (A)			RJ45 on the Drive Side (B)		
Communication Type	Pin No.	Description	Communication Type	Pin No.	Description
RS485	4	485+	RS485	4	485+
	5	485-		5	485-
	8	GND		8	GND
-	Enclosure	PE (shield layer)	-	Enclosure	PE (shield layer)

In case of a large number of nodes, connect the RS485 bus using the daisy chain mode. Connect the reference grounds of RS485 signals of all the nodes (up to 128 nodes) together.

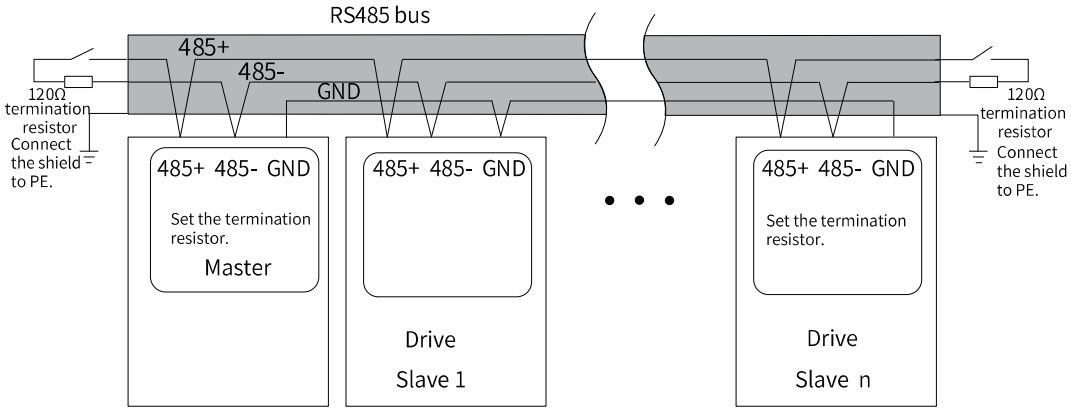

Figure 4-46 RS485 bus topology

Caution

Do not connect the GND terminal (⏚) of the host controller to the CGND terminal of the servo drive. Failure to comply will damage the device.

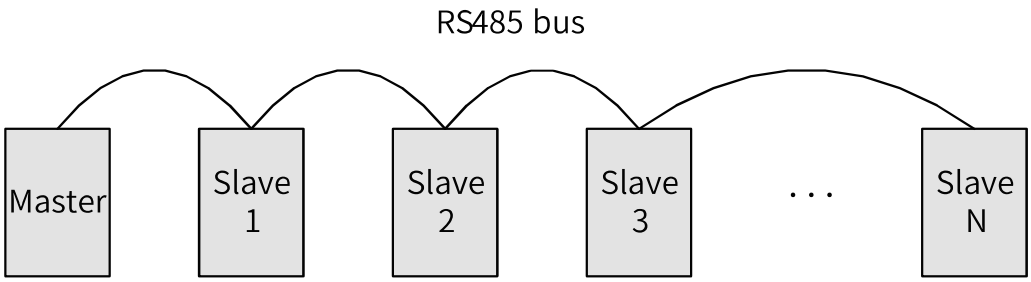

Figure 4-47 Daisy chain mode

The following table lists the maximum number of nodes and transmission distance supported by the standard RS485 circuit at different transmission rate.

Table 4–39 Transmission distance and number of nodes

No.	Transmission Rate (kbps)	Transmission Distance (m)	Number of Nodes	Cable Size
1	115.2	100	128	AWG26
2	19.2	1000	128	AWG26

Communication Connection with PC (RS232 communication)

You can connect the servo drive and the PC using the PC communication cable during RS232 communication. It is recommended to use RS232 communication interface. The outline drawing of the PC communication cable is shown in the following figure.

Figure 4-48 PC communication cable

Table 4–40 Pin connection relation between the servo drive and PC communication cable

RJ45 on the Drive (A)		DB9 on the PC (B)	
Signal Name	Pin No.	Signal Name	Pin No.
RS232-TXD	6	PC-RXD	2
RS232-RXD	7	PC-TXD	3
GND	8	GND	5
PE (shield layer)	Enclosure	PE (shield layer)	Enclosure

Pin assignment of DB9 terminal on the PC side is shown in the following table.

Table 4–41 Pin definition of DB9 terminal on the PC side ("B" in the preceding figure)

Pin No.	Description	Description	Pin
2	PC-RXD	PC receiving end	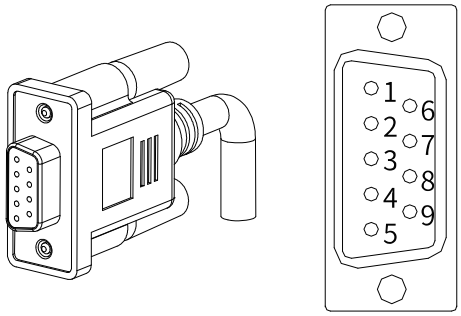
3	PC-TXD	PC transmitting end	
5	GND	Ground	
Enclosure	PE	Shield	

If the host controller supports USB interface only, use the serial-to-USB cable.

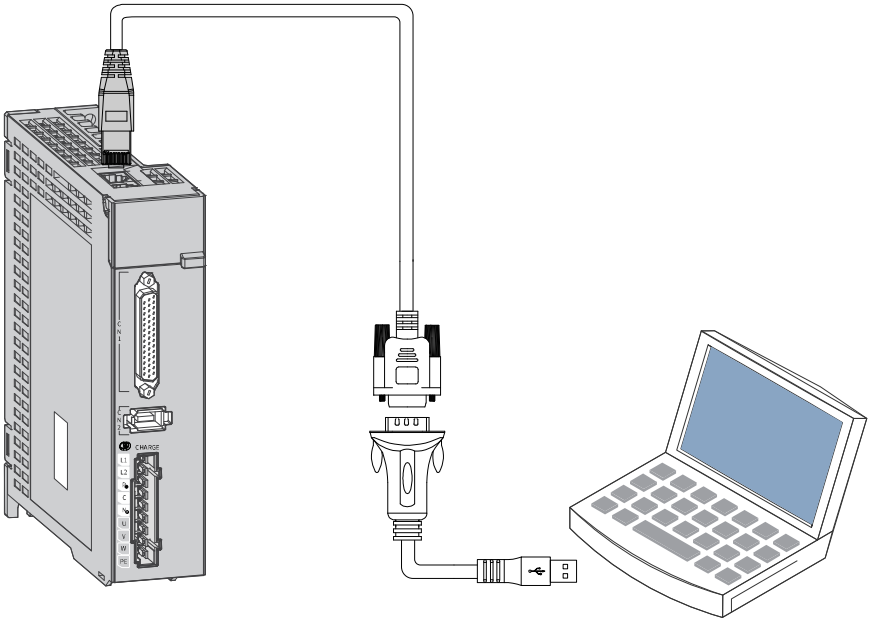

Figure 4-49 PC communication cable

Recommendations: Manufacture: Z-TEK Model: ZE551A, equipped with a 0.8 m USB extension cable Chip model: FT232

4.6 Wiring and Setting of the Regenerative Resistor

Connecting the regenerative resistor

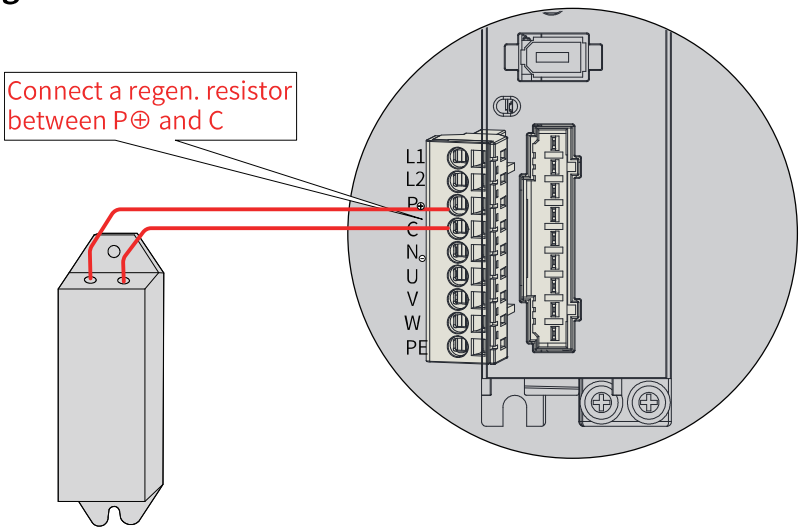

Figure 4-50 Wiring of external regenerative resistor

For cables used for terminals P⊕ and C, see *"4.2.3 Recommended Cable Specifications and Models" on page 43*.

Caution

Observe the following precautions when connecting the external regenerative resistor:

- The built-in regenerative resistor or jumper bar is not available in models S1R6 and S2R8. If an external regenerative resistor is needed for these models, connect it between terminals P⊕ and C.
- Remove the jumper between terminals P⊕ and D before using the external regenerative resistor. Failure to comply will result in overcurrent and damage the braking transistor.
- Do not connect the external regenerative resistor to the positive or negative pole of the bus directly. Failure to comply will damage the servo drive and result in a fire.
- Select a resistor with resistance higher than or equal to the minimum permissible value. Failure to comply will result in Er.201 (Overcurrent) or damage the servo drive.
- Make sure parameters H02.25 (Regenerative resistor setting), H02.26 (Power of external regenerative resistor) and H02.27 (Resistance of external regenerative resistor) are set properly before operating the servo drive.
- Install the external regenerative resistor on an incombustible object such as a metal.